REPRESENTATION SHEETS

Name of the Applicant (s)
Gujarat Council on Science and Technology (GUJCOST), Kalinga Institute of Industrial Technology (KIIT-DU), Dr. Mano Ranjan Kumar, Priyanshu Rout, Swapneel Dutta, Prangshu Pranayan Saikia, Bitopan Nath

Total No. of Sheets - 7
Sheet No. - 1

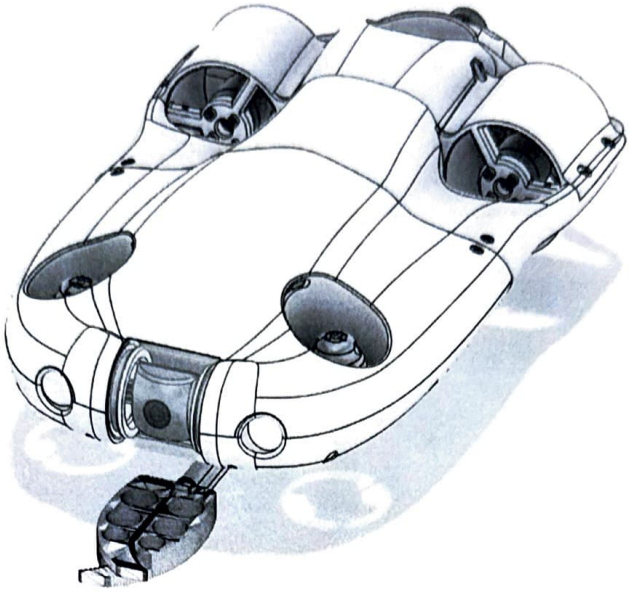

[Perspective View]

The novelty resides in the shape and configuration of the **"AUTONOMOUS UNDERWATER VEHICLE"** as illustrated.

No claim is made by virtue of this registration in respect of any mechanical or other action of the mechanism whatever or in respect of any mode or principle of construction of the article.

No claim is made by virtue of the registration to any right to the exclusive use of the words, letters, numbers, colour, combination or Trade Marks as appearing in the representation.

Dean
School of Electronics Engineering
Kalinga Institute of Industrial Technology
Deemed to be University, Bhubaneswar

Date: 03/11/2025

Dr. Narottam Sahoo

Dr. Suprava Patnaik

Dr. Mano Ranjan Kumar

Priyanshu Rout

Prangshu Pranayan Saikia

Swapneel Dutta

Bitopan Nath

REPRESENTATION SHEETS

Name of the Applicant (s)
Gujarat Council on Science and Technology (GUJCOST), Kalinga Institute of Industrial Technology (KIIT-DU), Dr. Mano Ranjan Kumar, Priyanshu Rout, Swapneel Dutta, Prangshu Pranayan Saikia, Bitopan Nath

Total No. of Sheets - 7
Sheet No. - 2

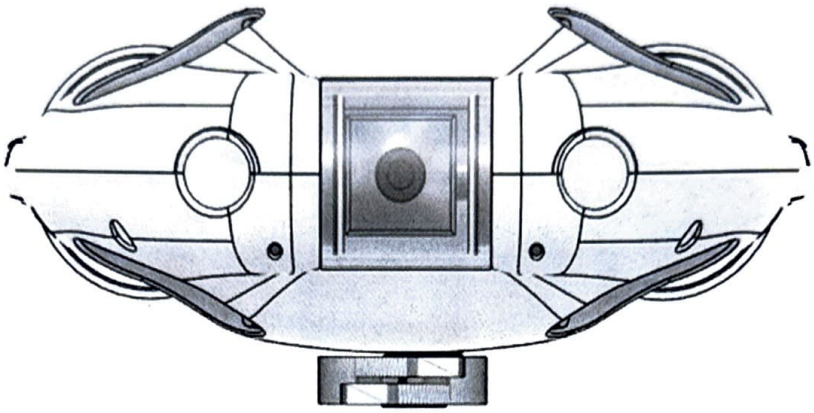

[Front View]

The novelty resides in the shape and configuration of the **"AUTONOMOUS UNDERWATER VEHICLE"** as illustrated.

No claim is made by virtue of this registration in respect of any mechanical or other action of the mechanism whatever or in respect of any mode or principle of construction of the article.

No claim is made by virtue of the registration to any right to the exclusive use of the words, lettering numbers, colour, combination or Trade Marks as appearing in the representation.

Dean
School of Electronics Engineering
Kalinga Institute of industrial Technology
Deemed to be University, Bhubaneswar-24

Date: 03/11/2025

Dr. Narottam Sahoo

Dr. Suprava Patnaik

Dr. Mano Ranjan Kumar

Priyanshu Rout

Prangshu Pranayan Saikia

Swapneel Dutta

Bitopan Nath

REPRESENTATION SHEETS

Name of the Applicant (s)
Gujarat Council on Science and Technology (GUJCOST), Kalinga Institute of Industrial Technology (KIIT-DU), Dr. Mano Ranjan Kumar, Priyanshu Rout, Swapneel Dutta, Prangshu Pranayan Saikia, Bitopan Nath

Total No. of Sheets - 7
Sheet No. - 3

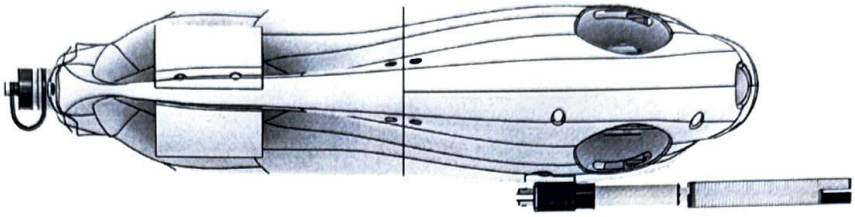

[Left-Hand side view]

The novelty resides in the shape and configuration of the **"AUTONOMOUS UNDERWATER VEHICLE"** as illustrated.

No claim is made by virtue of this registration in respect of any mechanical or other action of the mechanism whatever or in respect of any mode or principle of construction of the article.

No claim is made by virtue of the registration to any right to the exclusive use of the words, lettering numbers, colour, combination or Trade Marks as appearing in the representation.

Dean
School of Electronics Engineering
Kalinga Institute of Industrial Technology
Deemed to be University, Bhubaneswar-24

Date: 03/11/2025

Dr. Narottam Sahoo **Dr. Supravat Patnaik** **Dr. Mano Ranjan Kumar**

Priyanshu Rout **Prangshu Pranayan Saikia** **Swapneel Dutta**

Bitopan Nath

REPRESENTATION SHEETS

Name of the Applicant (s)
Gujarat Council on Science and Technology (GUJCOST), Kalinga Institute of Industrial Technology (KIIT-DU), Dr. Mano Ranjan Kumar, Priyanshu Rout, Swapneel Dutta, Prangshu Pranayan Saikia, Bitopan Nath

Total No. of Sheets - 7
Sheet No. - 4

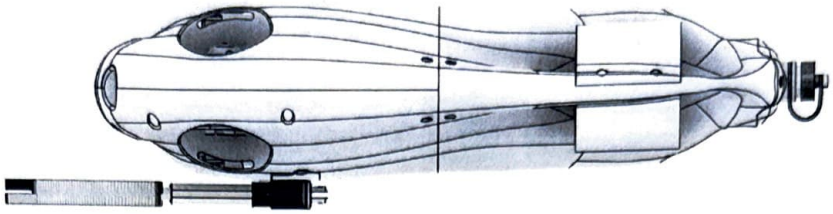

[Right-Hand side view]

The novelty resides in the shape and configuration of the **"AUTONOMOUS UNDERWATER VEHICLE"** as illustrated.

No claim is made by virtue of this registration in respect of any mechanical or other action of the mechanism whatever or in respect of any mode or principle of construction of the article.

No claim is made by virtue of the registration to any right to the exclusive use of the words, letters, numbers, colour, combination or Trade Marks as appearing in the representation.

Dean
School of Electronics Engineering
Kalinga Institute of industrial Technology
Deemed to be University, Bhubaneswar-24

Date: 03/11/2025

Dr. Narottam Sahoo | **Dr. Suprava Patnaik** | **Dr. Mano Ranjan Kumar**

Priyanshu Rout | **Prangshu Pranayan Saikia** | **Swapneel Dutta**

Bitopan Nath

REPRESENTATION SHEETS

Name of the Applicant (s)
Gujarat Council on Science and Technology (GUJCOST), Kalinga Institute of Industrial Technology (KIIT-DU), Dr. Mano Ranjan Kumar, Priyanshu Rout, Swapneel Dutta, Prangshu Pranayan Saikia, Bitopan Nath

Total No. of Sheets - 7
Sheet No. - 5

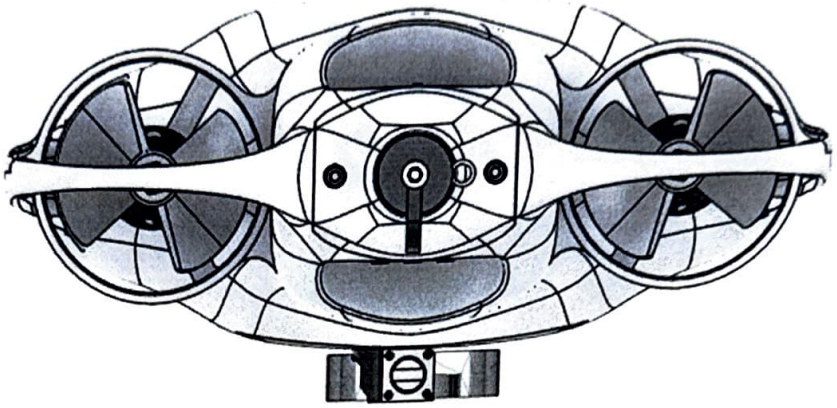

[Back view]

The novelty resides in the shape and configuration of the **"AUTONOMOUS UNDERWATER VEHICLE"** as illustrated.

No claim is made by virtue of this registration in respect of any mechanical or other action of the mechanism whatever or in respect of any mode or principle of construction of the article.

No claim is made by virtue of the registration to any right to the exclusive use of the words, letters, numbers, colour, combination or Trade Marks as appearing in the representation.

Dean
School of Electronics Engineering
Kalinga Institute of industrial Technology
Deemed to be University, Bhubaneswar-24

Date: 03/11/2025

Dr. Narottam Sahoo | **Dr. Suprava Patnaik** | **Dr. Mano Ranjan Kumar**

Priyanshu Rout | **Prangshu Pranayan Saikia** | **Swapneel Dutta**

Bitopan Nath

REPRESENTATION SHEETS

Name of the Applicant (s)
Gujarat Council on Science and Technology (GUJCOST), Kalinga Institute of Industrial Technology (KIIT-DU), Dr. Mano Ranjan Kumar, Priyanshu Rout, Swapneel Dutta, Prangshu Pranayan Saikia, Bitopan Nath

Total No. of Sheets - 7
Sheet No. - 6

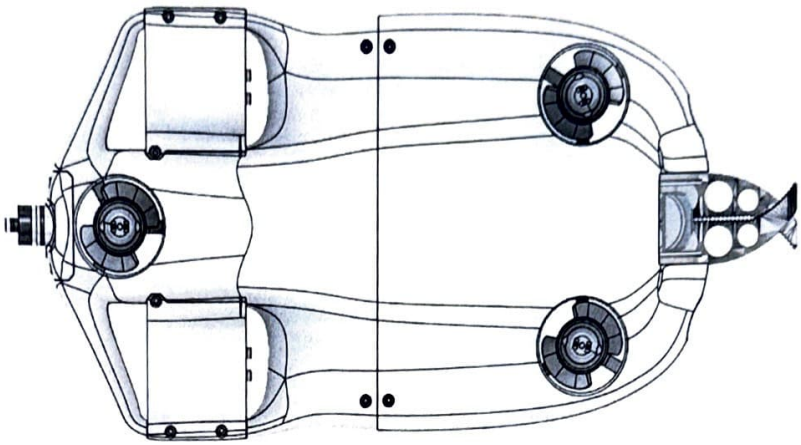

[Top view]

The novelty resides in the shape and configuration of the **"AUTONOMOUS UNDERWATER VEHICLE"** as illustrated.

No claim is made by virtue of this registration in respect of any mechanical or other action of the mechanism whatever or in respect of any mode or principle of construction of the article.

No claim is made by virtue of the registration to any right to the exclusive use of the words, letters, numbers, colour, combination or Trade Marks as appearing in the representation.

Dean
School of Electronics Engineering
Kalinga Institute of industrial Technology
Deemed to be University, Bhubaneswar-24

Date: 03/11/2025

Dr. Narottam Sahoo | **Dr. Supravat Ratnaik** | **Dr. Mano Ranjan Kumar**

Priyanshu Rout | **Prangshu Pranayan Saikia** | **Swapneel Dutta**

Bitopan Nath

REPRESENTATION SHEETS

Name of the Applicant (s)
Gujarat Council on Science and Technology (GUJCOST), Kalinga Institute of Industrial Technology (KIIT-DU), Dr. Mano Ranjan Kumar, Priyanshu Rout, Swapneel Dutta, Prangshu Pranayan Saikia, Bitopan Nath

Total No. of Sheets - 7
Sheet No. - 7

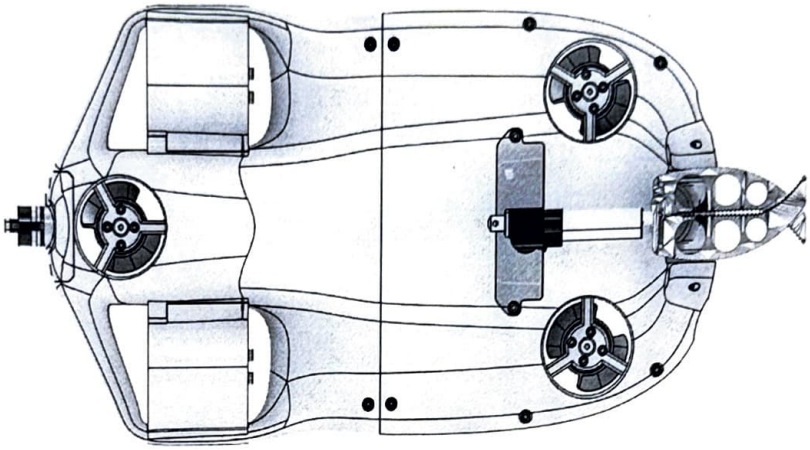

[Bottom view]

The novelty resides in the shape and configuration of the **"AUTONOMOUS UNDERWATER VEHICLE"** as illustrated.

No claim is made by virtue of this registration in respect of any mechanical or other action of the mechanism whatever or in respect of any mode or principle of construction of the article.

No claim is made by virtue of the registration to any right to the exclusive use of the words, letters, numbers, colour, combination or Trade Marks as appearing in the representation.

Dean
School of Electronics Engineering
Kalinga Institute of Industrial Technology
Deemed to be University, Bhubaneswar-24

Date: 03/11/2025

Dr. Narottam Sahoo

Dr. Suprava Patnaik

Dr. Mano Ranjan Kumar

Priyanshu Rout

Prangshu Pranayan Saikia

Swapneel Dutta

Bitopan Nath